# IPv6 ADDRESSING & STATIC ROUTING

## Purpose

The purpose of this lab is to familiarize ourselves with IPv6 structure and notation. We're going to look at how we enable IPv6 on Cisco routers as well as how to configure IPv6 static routes. Let's get into it.

## Topology

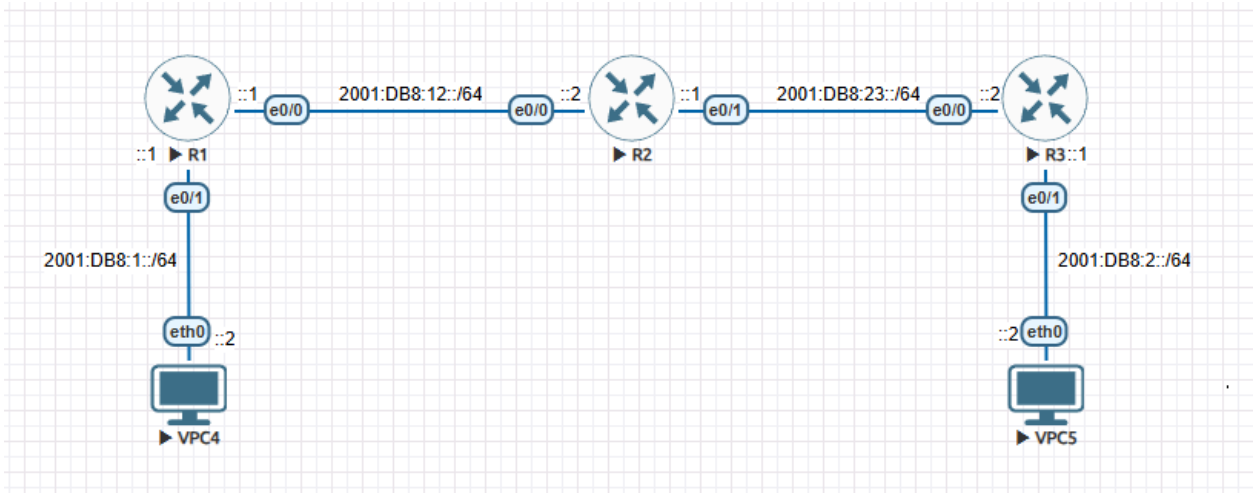


Figure 1: Topology

## Requirements

1. Enable IPv6 routing and configure IPv6 addresses on the relevant interfaces on all routers
2. Test connectivity between routers and hosts
3. Configure IPv6 static routes on all routers
4. Simulate edge routers as in the previous lab (default route)

## Tasks

First, we'll have to enable IPv6 routing and configure our IPv6 addresses on all the routers

### R1

```
R1(config)#ipv6 unicast-routing
R1(config)#int e0/0
R1(config-if)#ipv6 address 2001:DB8:12::1/64
R1(config-if)#no shut
R1(config)#int e0/1
R1(config-if)#ipv6 address 2001:DB8:1::1/64
R1(config-if)#no shut
```

**R2**

```
R2(config)#ipv6 unicast-routing
R2(config)#int e0/0
R2(config-if)#ipv6 address 2001:DB8:12::2/64
R2(config-if)#no shut
R2(config-if)#int e0/1
R2(config-if)#ipv6 address 2001:DB8:23::1/64
R2(config-if)#no shut
```

**R3**

```
R3(config)#ipv6 unicast-routing
R3(config)#int e0/0
R3(config-if)#ipv6 address 2001:DB8:23::2/64
R3(config-if)#no shut
R3(config-if)#int e0/1
R3(config-if)#ipv6 add 2001:DB8:2::1/64
R3(config-if)#no shut
```

**VPC4**

```
VPCS> ip 2001:DB8:1::2/64 2001:DB8:1::1
PC1 : 2001:db8:1::2/64
```

**VPC5**

```
VPCS> ip 2001:DB8:2::2/64
PC1 : 2001:db8:2::2/64
```

Once all interfaces are configured with an IPv6 address, we can test connectivity by pinging our different interfaces. On Cisco IOS, we ping an IPv6 address by using the command `ping ipv6` *`ipv6_address`*.

Next, we need to configure our static routes between our 2 LANs on all 3 of our routers.

**R1**

```
R1(config)#ipv6 route 2001:db8:2::/64 2001:db8:12::2
```

**R2**

```
R2(config)#ipv6 route 2001:db8:2::/64 2001:db8:23::2
R2(config)#ipv6 route 2001:db8:1::/64 2001:db8:12::1
```

**R3**

```
R3(config)#ipv6 route 2001:db8:1::/64 2001:db8:23::1
```

To verify that our routes are correct, we'll ping VPC5 from VPC4. Once that has been verified, we'll go ahead and configure default routes on R1 as well as R3.

**R1**

```
R1(config)#ipv6 route ::/0 2001:db8:12::2
```

**R3**

```
R3(config)#ipv6 route ::/0 2001:db8:23::1
```

We can then use `show ipv6 route` to verify the default route. Now, we can add a static address to VPC5's LAN using a link-local address.

**R1**

```
R1(config)#ipv6 route 2001:db8:2::/64 e0/0 fe80::2
```

## Verification

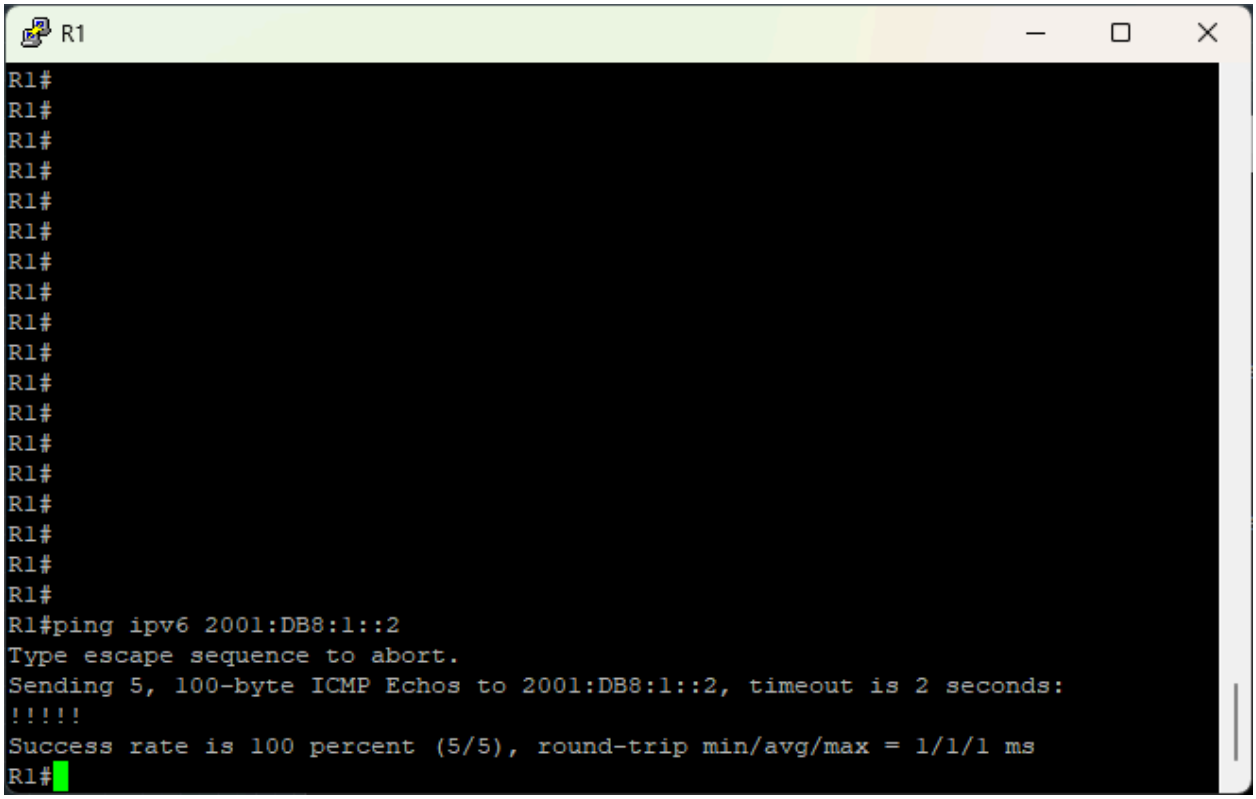


Figure 2: Ping to VPC4

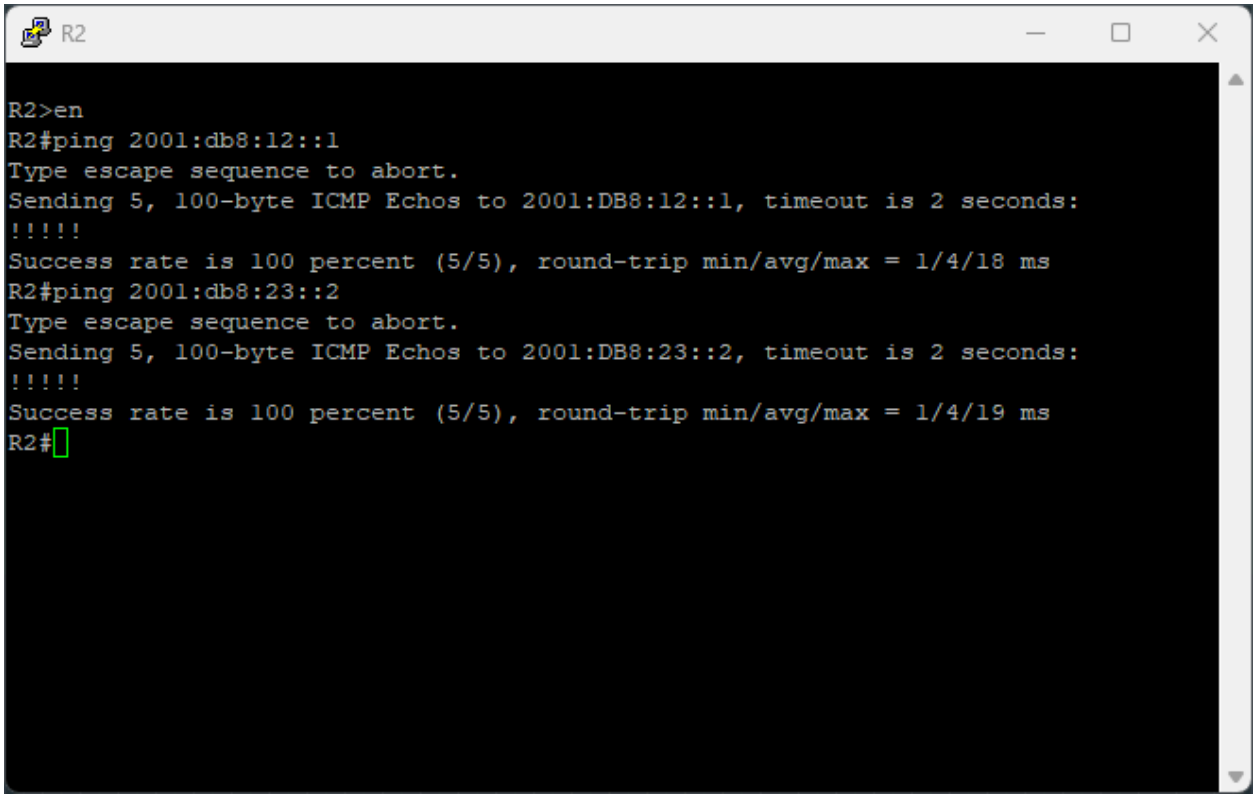


Figure 3: Ping to R1 & R3

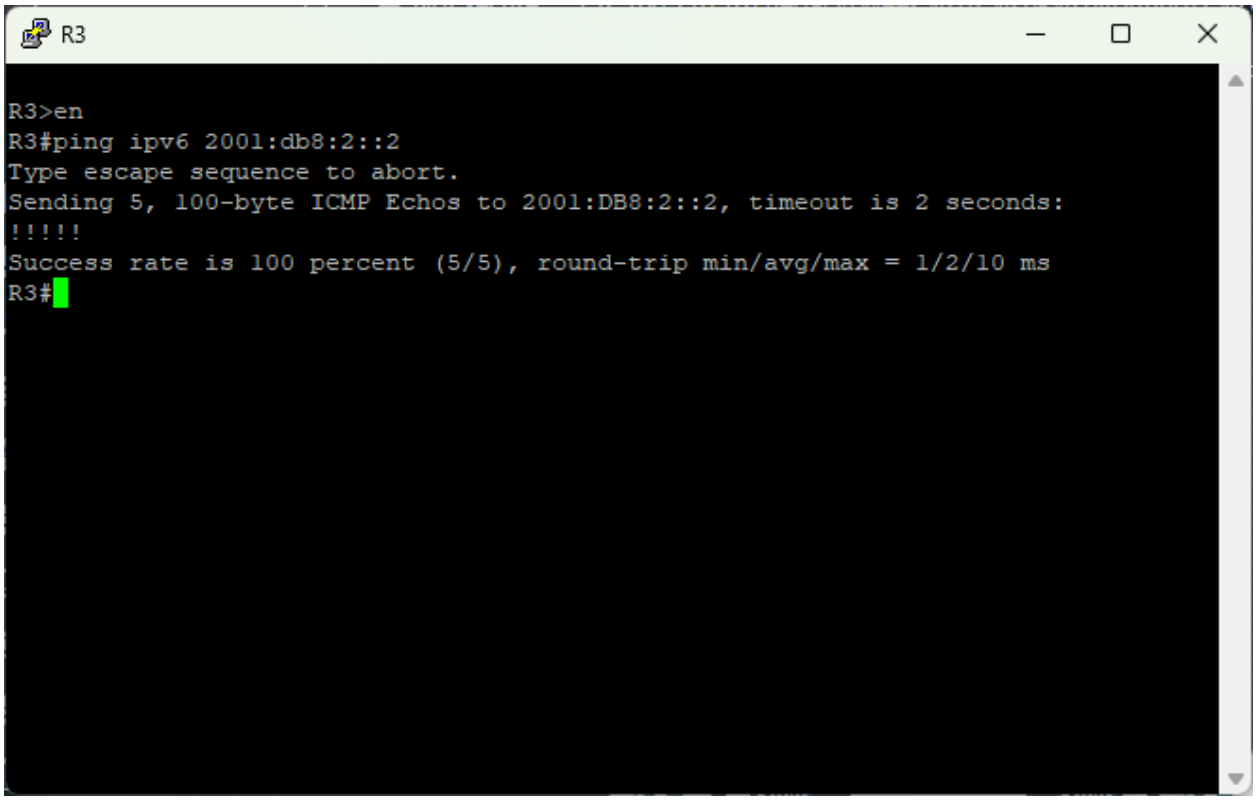


Figure 4: Ping to VPC5

```
R2>en
R2#ping 2001:db8:12::1
Type escape sequence to abort.
Sending 5, 100-byte ICMP Echos to 2001:DB8:12::1, timeout is 2 seconds:
!!!!!
Success rate is 100 percent (5/5), round-trip min/avg/max = 1/4/18 ms
R2#ping 2001:db8:23::2
Type escape sequence to abort.
Sending 5, 100-byte ICMP Echos to 2001:DB8:23::2, timeout is 2 seconds:
!!!!!
Success rate is 100 percent (5/5), round-trip min/avg/max = 1/4/19 ms
R2#show ipv6 ne
R2#show ipv6 neighbors
IPv6 Address                              Age Link-layer Addr State Interface
2001:DB8:12::1                              6 aabb.cc00.1000  STALE Et0/0
FE80::A8BB:CCFF:FE00:1000                   6 aabb.cc00.1000  STALE Et0/0
2001:DB8:23::2                              6 aabb.cc00.3000  STALE Et0/1
FE80::A8BB:CCFF:FE00:3000                   6 aabb.cc00.3000  STALE Et0/1

R2#
```

Figure 5: `show ipv6 neighbors` output on R2

```
VPCS>
VPCS>
VPCS>
VPCS>
VPCS>
VPCS>
VPCS>
VPCS>
VPCS>
VPCS>
VPCS>
VPCS>
VPCS>
VPCS>
VPCS>
VPCS> ping 2001:db8:2::2

2001:db8:2::2 icmp6_seq=1 ttl=58 time=1.028 ms
2001:db8:2::2 icmp6_seq=2 ttl=58 time=1.088 ms
2001:db8:2::2 icmp6_seq=3 ttl=58 time=1.006 ms
2001:db8:2::2 icmp6_seq=4 ttl=58 time=0.962 ms
2001:db8:2::2 icmp6_seq=5 ttl=58 time=0.942 ms

VPCS>
```

Figure 6: Ping to VPC5 from VPC4

```
R3
R3#show ipv6 route
IPv6 Routing Table - default - 7 entries
Codes: C - Connected, L - Local, S - Static, U - Per-user Static route
       B - BGP, HA - Home Agent, MR - Mobile Router, R - RIP
       H - NHRP, I1 - ISIS L1, I2 - ISIS L2, IA - ISIS interarea
       IS - ISIS summary, D - EIGRP, EX - EIGRP external, NM - NEMO
       ND - ND Default, NDp - ND Prefix, DCE - Destination, NDr - Redirect
       RL - RPL, O - OSPF Intra, OI - OSPF Inter, OE1 - OSPF ext 1
       OE2 - OSPF ext 2, ON1 - OSPF NSSA ext 1, ON2 - OSPF NSSA ext 2
       la - LISP alt, lr - LISP site-registrations, ld - LISP dyn-eid
       lA - LISP away, a - Application
S   ::/0 [1/0]
     via 2001:DB8:23::1
S   2001:DB8:1::/64 [1/0]
     via 2001:DB8:23::1
C   2001:DB8:2::/64 [0/0]
     via Ethernet0/1, directly connected
L   2001:DB8:2::1/128 [0/0]
     via Ethernet0/1, receive
C   2001:DB8:23::/64 [0/0]
     via Ethernet0/0, directly connected
L   2001:DB8:23::2/128 [0/0]
     via Ethernet0/0, receive
L   FF00::/8 [0/0]
     via Null0, receive
R3#
```

Figure 7: `show ipv6 route` on R3 to show the default route

## Conclusion

In this lab, we learned how to configure IPv6 addresses on our router interfaces as well as VPCs. We also looked at how to configure static routes using IPv6. Routers do not have IPv6 routing enabled by default, so the `ipv6 unicast-routing` command is essential when planning to do any IPv6 routing.

IPv6 is the successor to IPv4, designed primarily to solve address exhaustion, but it also improves routing efficiency, auto-configuration as well as security support. An IPv6 address is 128-bit, therefore the number of possible addresses are
$2^{128}$ = 340,282,366,920,938,463,463,374,607,431,768,211,456 (approx. 340 undecillion)!
With this address scheme, there is quite literally a limitless supply of addresses for future devices.

IPv6 addresses are written in hexadecimal, and are divided into 8 groups of 16 bits (Hextets). Each group is separated by a colon. Here's an example of an IPv6 address that is similar to what was used in this lab: 2001:0db8:0000:0000:0000:0000:0000:0001

You may be thinking, this address is quite long and the ones in the lab weren't as long. Yes and no. The addresses are still almost the same, the only difference is that they were shortened to make it easier to type. IPv6 has certain rules that allow the shortening of addresses.

1. **Removing leading zeros**

From the above address, we can remove the leading zeros, and instead of 0db8 and 0001 we can just write down db8 and 1 respectively, leaving us with:
2001:db8:0000:0000:0000:0000:0000:1. The address is still quite long though. However, there is another rule we can use for shortening addresses.

2. **Replacing one continuous block of zeros with ::**

This rule allows us to reduce 2001:db8:0000:0000:0000:0000:0000:1 to just 2001:db8::1. Much better. The only thing with this rule is that you can only use it ONCE per address, otherwise devices would get confused as to how many zeros to fill in the different gaps.

IPv6 does not use subnet masks, but rather prefix lengths only. Common prefix lengths include:
/64 → Standard LAN and most common prefix
/128 → Used for a single host
/48 → Used for site allocation (from an ISP)

There are 5 types of IPv6 addresses

| Name | Range | Example | Use Case |
|---|---|---|---|
| Global Unicast (Public) | 2000::/3 | 2001::db8:1:1::1/64 | Internet routing and public-facing devices |
| Link-Local | FE80::/10 | fe80::1 | Automatically created on every IPv6 enabled interface. Used for Neighbor Discovery, Routing protocol adjacencies as well as a default gateway for hosts. |
| Unique Local | FC00::/7 / FD00::/8 | FD12:3456:789A::1/64 | Private IPv6 addresses. Used for internal-only networks and lab environments. |
| Multicast | FF00::/8 | FF02::2 | Used for Neighbor Discovery and routing protocols |
| Anycast | Conceptual, not a | N/A | Used for DNS, CDN |

| | | | |
|---|---|---|---|
| | particular range | | & Load balancing |

Things to note are that routers use link-local addresses as next-hops, not global addresses. Also IPv6 does not have broadcast addresses like IPv4. The concept of Anycast is using the same IPv6 address for multiple devices, that way, traffic will go to the nearest device with that address.